PLANRAY
BLUETRACE
1–phase

MODEL:
BT–300–1P / BT–400–1P

NOTE1:
DO NOT CONNECT EXTERNAL VOLTAGE IN THESE PINS (17 and 19)!
IF NEEDED, BRANCH THE DEVICE SUPPLY VOLTAGE ON FROM THE MAIN CIRCUIT WITH 2 PCS, (Phoenix Contact FBS 2–5; 3030161)
CONNECTORS 17–18 AND 19–20.

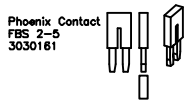

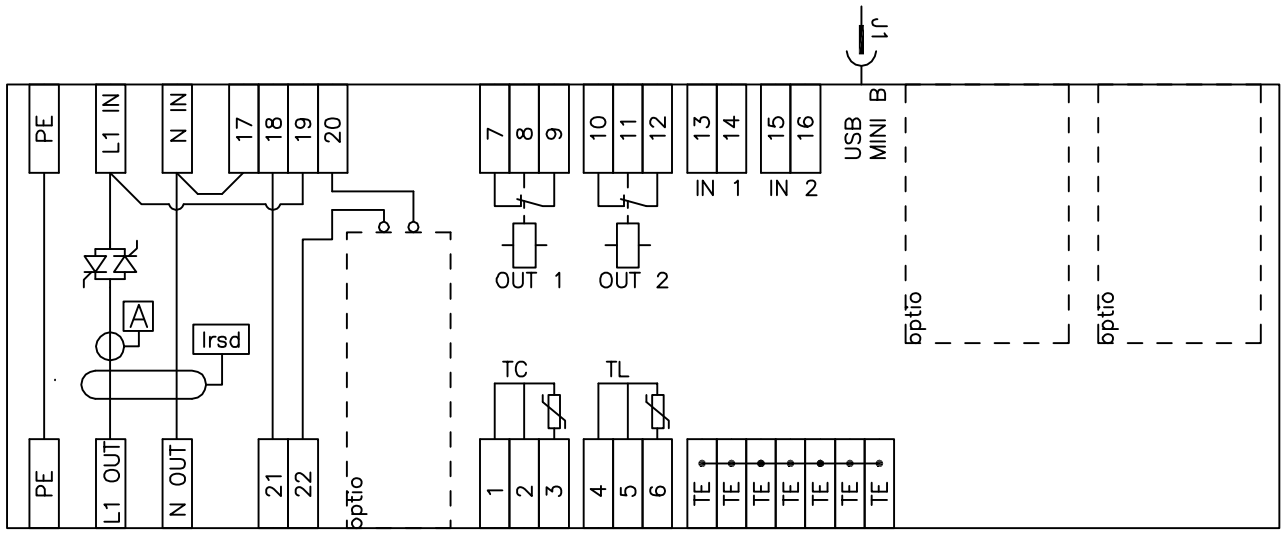

Connectors

No.	Explanation
1	TC SENSOR, +5V
2	TC SENSOR, + LEAD Ω COMP.
3	TC SENSOR, MEASUREMENT
4	TL SENSOR, +5V
5	TL SENSOR, + LEAD Ω COMP.
6	TL SENSOR, MEASUREMENT
7	OUTPUT 1, RELAY NC
8	OUTPUT 1, RELAY NO
9	OUTPUT 1, RELAY COMMON
10	OUTPUT 2, RELAY NC
11	OUTPUT 2, RELAY NO
12	OUTPUT 2, RELAY COMMON
13	INPUT 1, LOGIC (DC+ / AC L)
14	INPUT 1, LOGIC (DC– / AC N)
15	INPUT 2, LOGIC (DC+ / AC L)
16	INPUT 2, LOGIC (DC– / AC N)
17	MAIN CIRCUIT, N, – – – *NOTE1
18	DEVICE SUPPLY VOLTAGE, N
19	MAIN CIRCUIT, L, – – – *NOTE1
20	DEVICE SUPPLY VOLTAGE, L
21	BT–TL600 CONTACTOR CONTROL, N
22	BT–TL600 CONTACTOR CONTROL, L
L1 IN	MAIN CIRCUIT L1, IN
L2 IN	MAIN CIRCUIT L2, IN
L3 IN	MAIN CIRCUIT L3, IN
N IN	MAIN CIRCUIT N, IN
N OUT	MAIN CIRCUIT N, OUT
L1 OUT	MAIN CIRCUIT L1, OUT
L2 OUT	MAIN CIRCUIT L2, OUT
L3 OUT	MAIN CIRCUIT L3, OUT
PE	POTENTIAL EARTH
TE	TECHNICAL EARTH

BLUETRACE GUIDE 2012

HISTORY

Revision	Change	Date	Changed
1.1			
1.0	FIRST RELEASE OF ADVISORY DRAWING, BLUETRACE PRODUCT CONNECTORS	20.11.2012	VK

Product: BLUETRACE 1–PHASE – DEVICE CONNECTORS				
Part name: BLUETRACE PRODUCTS	Code: –	Rev.: 1.0	Description: ADVISORY DRAWING	Mass Kg: – / Pcs: 1
Standards / Tolerances: ISO 128	Treatment: –	Color: –	Material: –	
Drawing: dim: mm	Sheet size: A3	Scale: 1.0	Drawing code: BT–x00–1P_connectors.dwg	
Revision: 1.0	Date: 20.11.2012	Drawn: VK	Page: 1 / 1	

Drawing information. Publisher Planray Oy